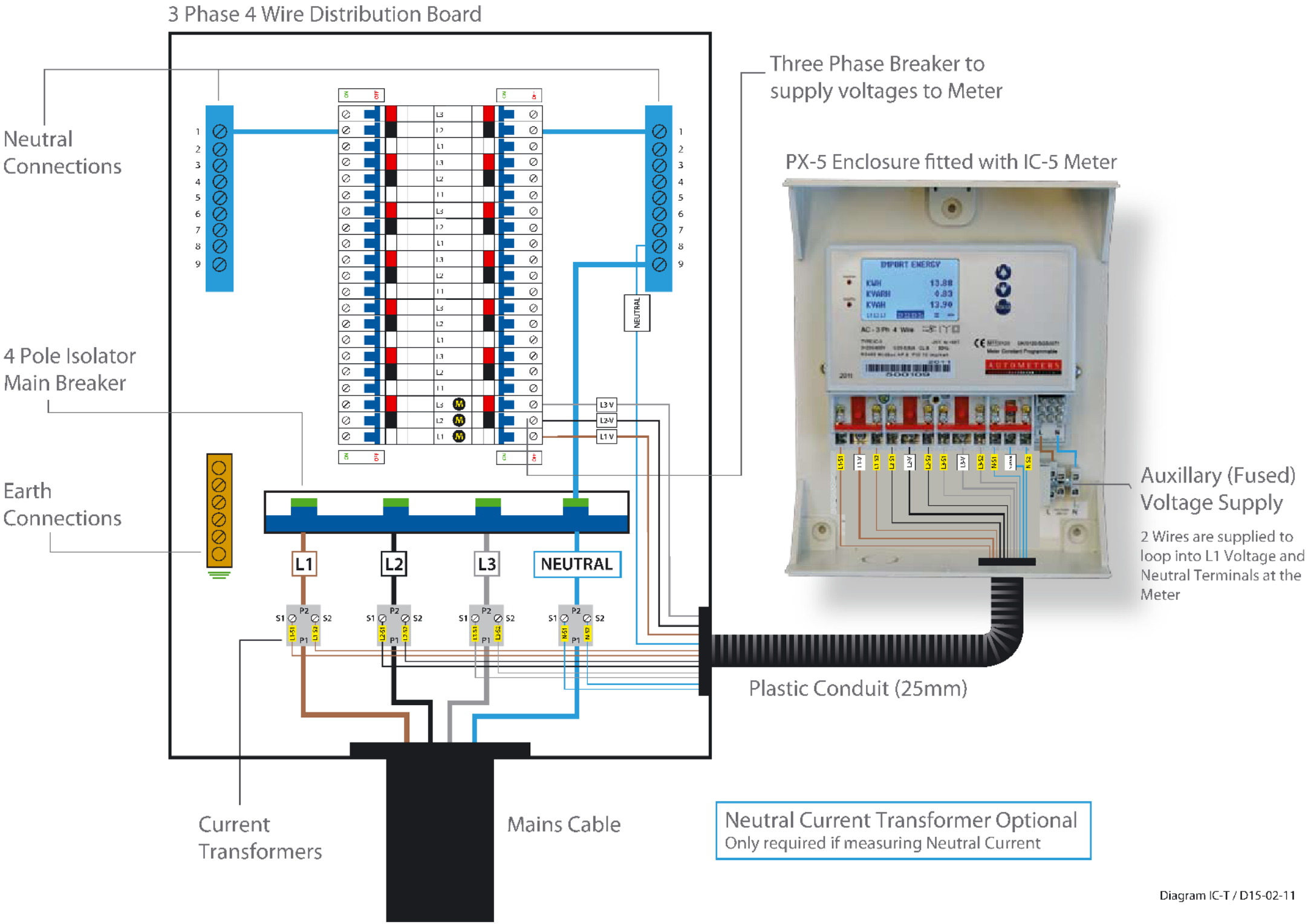
3 Phase 4 Wire Distribution Board
Neutral Connections
Three Phase Breaker to supply voltages to Meter
PX-5 Enclosure fitted with IC-5 Meter
4 Pole Isolator Main Breaker
Earth Connections
L1
L2
L3
NEUTRAL
Auxillary (Fused) Voltage Supply
2 Wires are supplied to loop into L1 Voltage and Neutral Terminals at the Meter
Plastic Conduit (25mm)
Current Transformers
Mains Cable
Neutral Current Transformer Optional
Only required if measuring Neutral Current
Diagram IC-T / D15-02-11